DEUBLIN
A HOERBIGER COMPANY

CORRUGATING SOLUTIONS



STEAM JOINT AND SIPHON SYSTEM FOR ALL CORRUGATING APPLICATIONS

To achieve maximum heat transfer to the surface of the roll, the condensate from inside the roll must be evacuated.

Corrugating machines use stationary or rotating siphons to evacuate condensate. A large majority of siphon systems used in corrugating operations employ stationary siphons.

Maintaining minimal clearance between the siphon and the surface of the roll and its orientation in the vertical, downward position requires a rigid siphon support system. This configuration is available in all DEUBLIN steam joint and stationary siphon systems.

Various stages of condensate behavior are shown below. As machine speeds increase, the condensate eventually transitions to a rimming condition. Maximum heat transfer is achieved by maintaining a minimum condensate layer thickness.

Key considerations for corrugating efficiency include siphon size, minimal and stable clearance between the siphon pipe and the roll, and maintaining the siphon in the vertical, downward position.

Finally, the siphon system must withstand machine vibration without compromising the siphon clearance.

DEUBLIN meets the challenge of reducing the condensate layer inside the roll to a minimum with our innovative design feature that allows siphon clearance adjustment from outside the roll. The benefits of reduced siphon clearance are:

- *Reduced condensate layer inside the roll, which increases the temperature on the roll surface improving production*
- *Elimination of roll flooding – accelerates start up*
- *Increased product uniformity and quality with reduced scrap rates*

Condensate Behavior

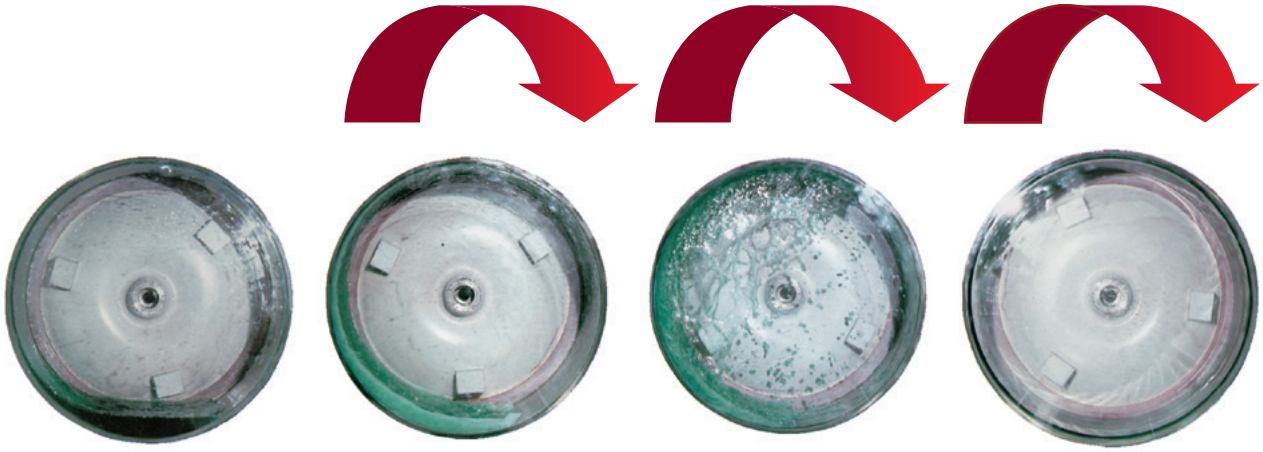

STAGE 1	STAGE 2	STAGE 3	STAGE 4
Puddle	**Light Cascading**	**Cascading**	**Rimming**

WARNING DEUBLIN unions should not be used to convey flammable media (flash point ≤ 140°F or 60°C) as leakage may result in explosions or fires. DEUBLIN unions should be used in accordance with standard safety guidelines for the media, and in a well-ventilated area. The use of our product on hazardous or corrosive media is strictly forbidden.

Steam Joints

DEUBLIN steam joint and siphon systems enhance productivity by more reliably inducing steam into the rolls and removing condensate.

DEUBLIN systems eliminate a number of common problems:

- *Broken siphons*
- *Short seal life*
- *Leaking gaskets*
- *Cold spots*
- *Inability to adjust siphons*
- *Broken rotors*
- *Blistering*

Types of Steam Joints: Self-Supported, Rod-Supported and Bell-Supported

Self-supported steam joints are single-piece units that mount directly onto the roll journal, simplifying installation and replacement. Carbon graphite bushings support the steam joint housing relative to the rotor.

Rod-supported steam joints are mounted on support rods that are secured to the frame of the machine. This rigid support allows the steam joint to withstand side loads applied by the steam and condensate hoses.

Bell-supported steam joints are mounted to an existing bearing surface. The Bell is fabricated and rigidly secured to the bearing cover of the roll.

Features

1. *Heavy Duty Rotor eliminates rotor breakage and enhances operator mechanic safety*
2. *Convex Seal Ring keeps carbon in compression (4 times stronger than concave rings in tension) to better withstand vibration, mechanical and thermal shock and pressure spikes*
3. *Exclusive externally adjustable siphon orientation and clearance provides optimum condensate removal, improves heat transfer and helps eliminate blistering*
4. *Clamping siphon support for increased siphon rigidity*
5. *Large contact surface area provides better gasket sealing surface*
6. *Seal Wear Indicator aids planned maintenance*
7. *Jacking Screw allows ease of disassembly*
8. *Heavy-duty thick wall rotor withstands greater torsion stress; eliminates rotor failures and enhances worker safety*
9. *Adjustable End Cap can be oriented at multiple angles*
10. *Alignment Slot ensures siphon drop leg at vertical downward position within the roll; split collar ensures rigid and secure attachment of siphon pipe*

HPS A Steam Joint

- **Nominal Size: 1 1/2”**
- **Siphon Size: 1/2”**
- **Flange Adapter Kit avaliable to fit rolls from 1-1/2” to 2”**

See previous page for part numbers

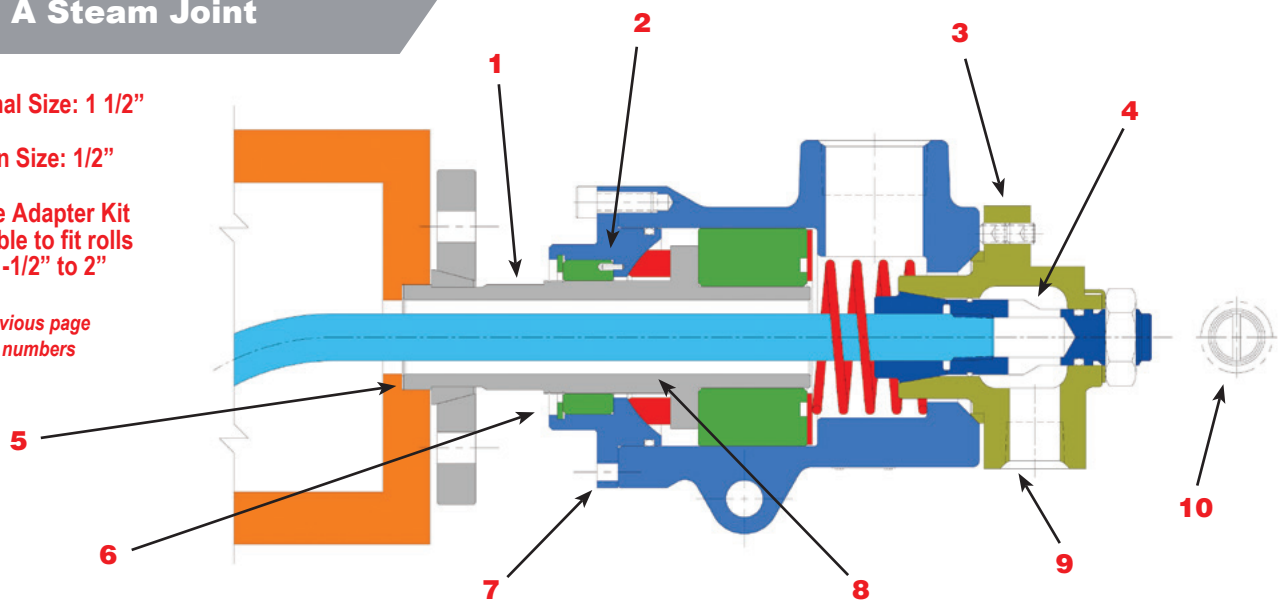



Operating Data

Maximum Saturated Steam Pressure	250 PSI	17 bar
Maximum Speed	400 RPM	400/min
Maximum Temperature	400°F	205°C

CMS50

Series for High Pressure Steam Service in Corrugators

CMS50S Steam Joint with Stationary Siphon

The CMS50S has been designed for drop down stationary siphon application. The housing features a collet mechanism to offer a rigid support of the stationary siphon. This also allows the siphon pick-up surface to be held at a uniform clearance from the surface of the roll. In addition, the siphon clearance can be adjusted by an external siphon clearance adjustment mechanism.

CMS50R Steam Joint with Rotating Siphon

The CMS50R has been designed for a rotating siphon application commonly used in gun-drilled rolls. Sealing between the rotating siphon pipe and the housing is accomplished by an end face mechanical seal. The sealing pressure across the internal mechanical seal is equivalent to the differential pressure between the inlet of the steam and outlet of the condensate/steam mixture. Due to the reduced magnitude of pressure across the seal, torque, friction and wear of the seal are minimized, extending the service life of the seal.



CMS Corrugating Steam Joints – Features and Benefits

Features	Benefits
Stationary and Rotating Siphon models available	• Accommodates all corrugating machine types
Cartridge, flat-faced balanced mechanical seal	• Reduces pressure, torque and wear, extending seal life • Compensates for angular misalignment
Cartridge seal	• Simplifies and reduces maintenance when servicing the seal
Wear indicator	• Allows for visual inspection for preventative maintenance
Enclosed springs	• Prevents spring hangup and premature failure
Rotating Siphon design utilizes dual Mechanical Seals	• Eliminates Short Circuit of steam

Spring Reinforced Siphon (SRS) Elbow Siphon

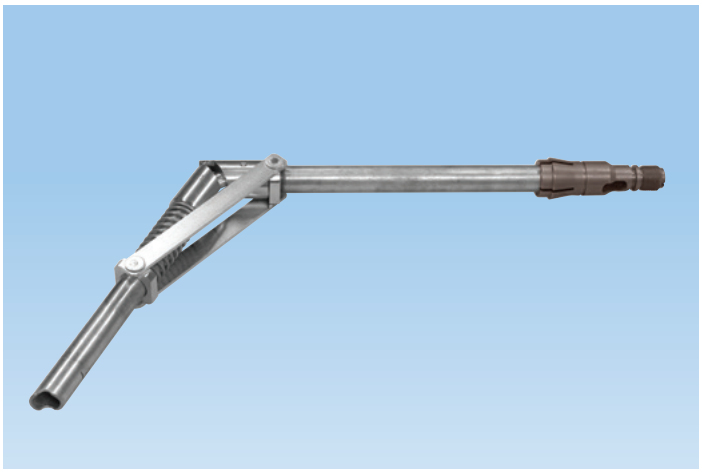

90º Elbow Siphon

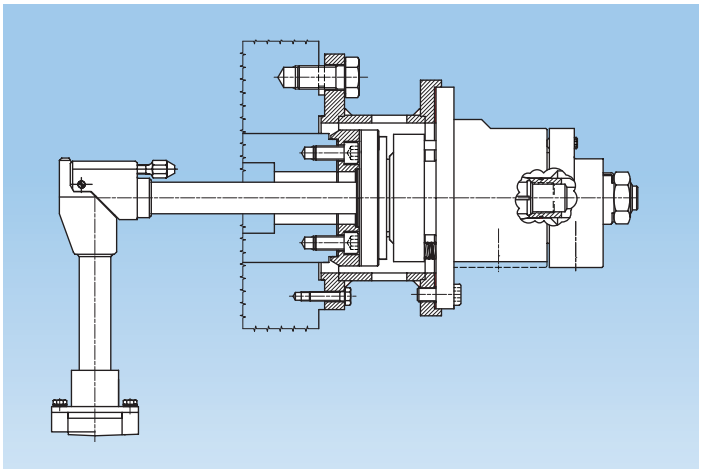

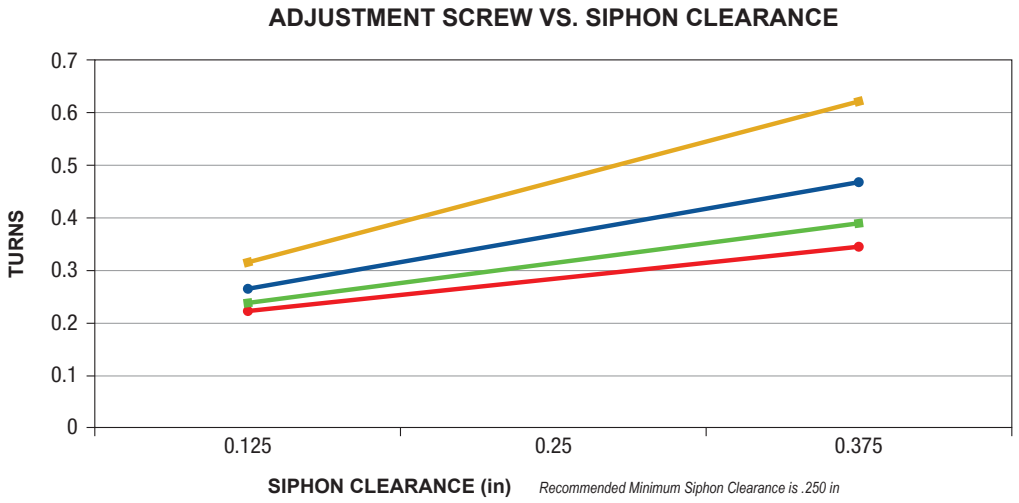

Turbulence Bars - breaks rimming condensate and improves heat transfer

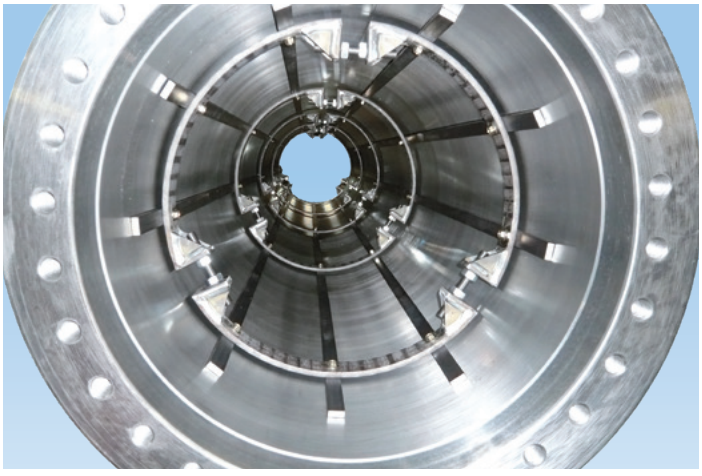

CMS50R (Rotating Siphon)

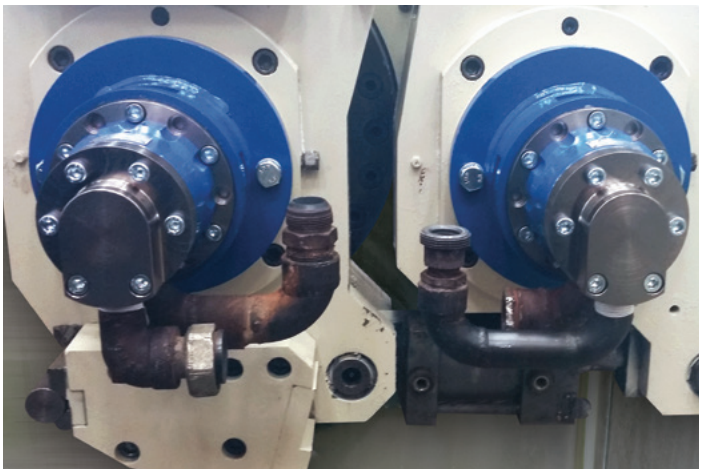

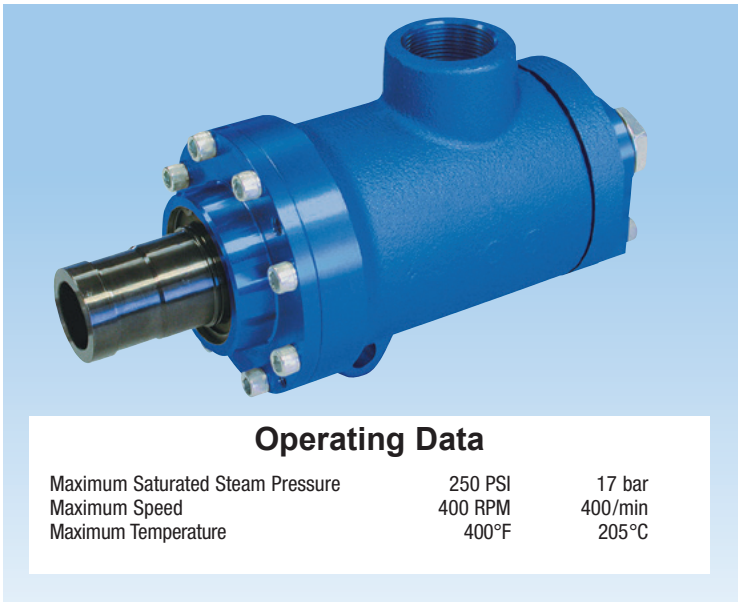

Operating Data

Maximum Saturated Steam Pressure	250 PSI	17 bar
Maximum Speed	400 RPM	400/min
Maximum Temperature	400°F	205°C

HPS A

Series for High Pressure Steam Service in Corrugators

- Duoflow design
- Self-supported rotating union
- Seals and bearings made of special Carbon Graphite
- Convex seal ring better suited to handle mechanical and thermal shock
- External mechanism to adjust siphon pipe through end cap
- Stainless steel spring
- Heavy duty steel rotor design
- Dual bearings for extended service life
- Siphon Type: Stationary
- Siphon Size: 1/2”



Operating Data

Maximum Saturated Steam Pressure	250 PSI	17 bar
Maximum Speed	400 RPM	400/min
Maximum Temperature	400°F	205°C

HPS B

Series for High Pressure Steam Service in Corrugators

- Duoflow design
- Self-supported
- Seals and bearings made of special Carbon Graphite
- Convex seal ring better suited to handle mechanical and thermal shock
- External mechanism to adjust siphon pipe through end cap
- Stainless steel spring
- Heavy duty steel rotor design
- Dual bearings for extended service life
- Siphon Type: Stationary or Rotating
- Siphon Size: 3/4” Stationary; 3/4” & 1” Rotating



Operating Data

Maximum Saturated Steam Pressure	250 PSI	17 bar
Maximum Speed	400 RPM	400/min
Maximum Temperature	400°F	205°C

HPS C

Series for High Pressure Steam Service in Corrugators

- Duoflow design
- Rod Supported (by customer)
- Seals made of special Carbon Graphite
- Convex seal ring better suited to handle mechanical and thermal shock
- External mechanism to adjust siphon pipe through end cap
- Stainless steel spring
- Heavy duty steel rotor design
- Siphon Type: Stationary or Rotating
- Siphon Size: 3/4” Stationary; 3/4” & 1” Rotating

Rod Kit included with HPS C

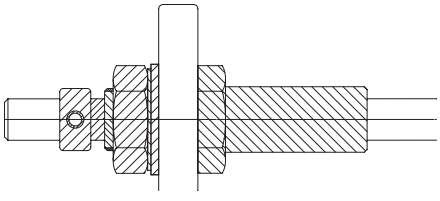

Mounting to DEUBLIN Supplied Rods

Flange Adapter

1¼" **2"**

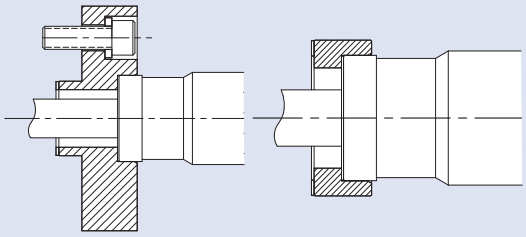

P007661 **17894K**

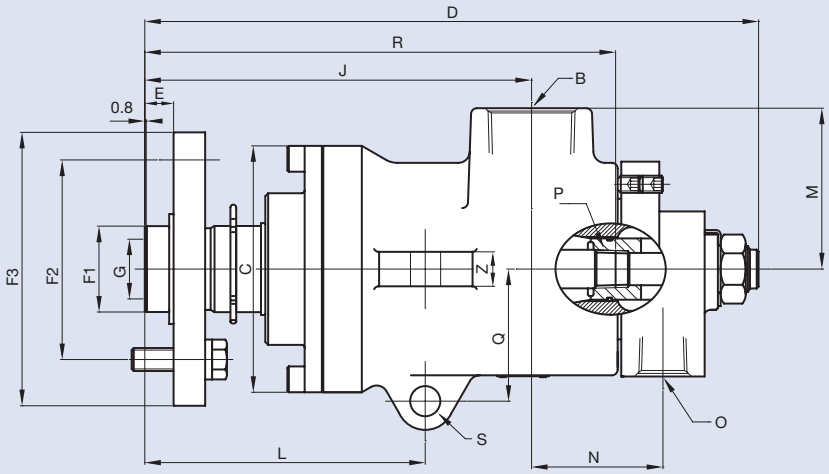

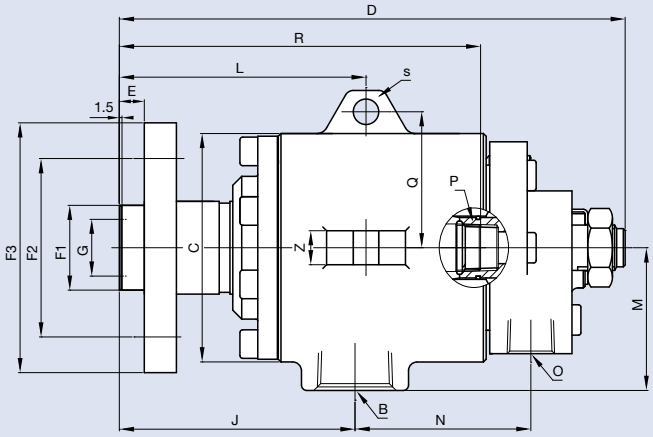

HPS B with Stationary Siphon (H40-052-220737)

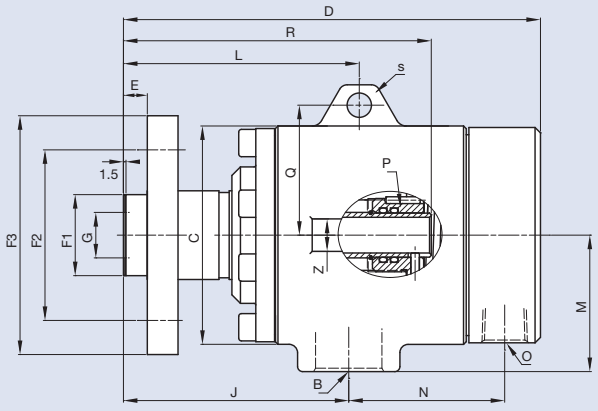

HPS B with Rotating Siphon (H40-058-223741)

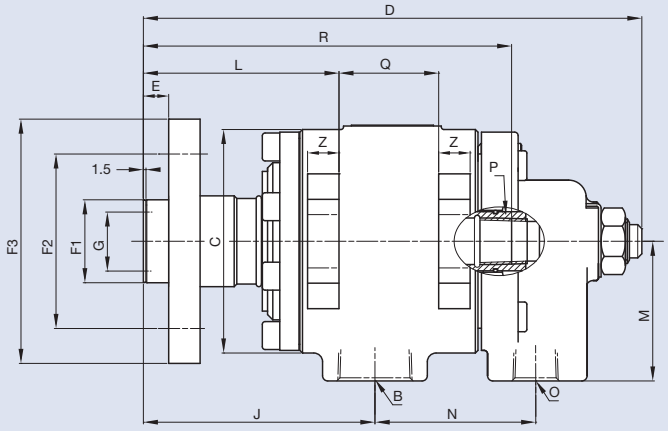

HPS C with Stationary Siphon (HS40-500013) with 7/8"-9 UNC Rods*
HPS C with Stationary Siphon (HS40-500014) with M20 x 2.5 Rods*

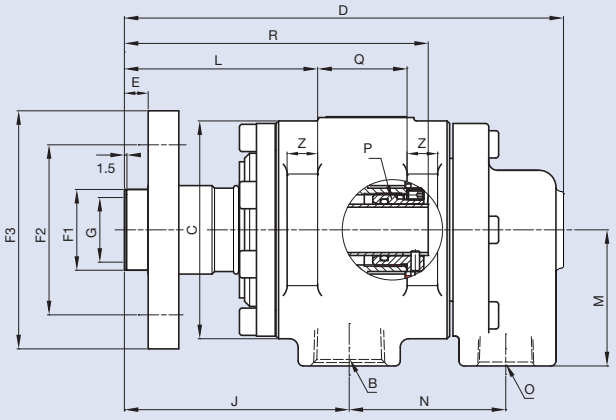

HPS C with Rotating Siphon (HS40-500016) with 7/8"-9 UNC Rods**
HPS C with Rotating Siphon (HS40-500015) with M20 x 2.5 Rods**

Union	Ordering Number	Siphon Size	B	O	C Ø	D	E	F1 Ø	F2 Ø	F3 Ø	G Ø	J	L	M	N	P	Q	R	S Ø	Z	Ship Weight
HPS A	HPS600012	½"	1½"	¾"	5 23/64"	13 23/64"	5/8"	1.870" / 1.868"	4¾" or 3 15/16" (4x) 9/16" Holes	5 61/64"	1 19/64"	8 27/64"	6 7/64"	3½"	2 55/64"	½" NPT	2⅞"	10¼"	21/32"	¾"	38#
HPS B	H40-052-220737	¾"	1¼"	¾"	5 1/32"	11 15/32"	35/64"	1.870" / 1.868"	3 15/16" (4x) 9/16" Holes	5 33/64"	1½"	5 13/64"	5 7/16"	3 5/32"	3⅞"	¾" NPT	3"	7 31/32"	9/16"	¾"	38#
HPS B	H40-058-223741	¾"	1¼"	¾"	5"	9⅝"	35/64"	1.870" / 1.868"	3 15/16" (4x) 9/16" Holes	5 33/64"	1½"	5 13/64"	5 7/16"	3 5/32"	3⅝"	1.017" / 1.015"	3"	7 7/64"	9/16"	¾"	38#
HPS C	See above*	¾"	1¼"	¾"	5 3/64"	11¼"	5/16"	1.870" / 1.868"	3 15/16" (4x) 9/16" Holes	5 33/64"	1½"	5 13/64"	4 13/32"	3 5/32"	3⅝"	¾" NPT	2¼"	8 5/16"	N\A	¾"	45#
HPS C	See above**	1"	1¼"	¾"	5 3/64"	10 11/64"	35/64"	1.870" / 1.868"	3 15/16" (4x) 9/16" Holes	5 33/64"	1½"	5 13/64"	4 13/32"	3 5/32"	3⅝"	1.187" / 1.185"	8 1/16"	7 1/32"	N\A	45/64"	45#

Since its founding in 1945 as a small, family-owned business, Deublin consistently has adhered to a policy of designing and building the best products of their kind in the world. The result of this policy has been continuous growth through the years, and for this we are grateful to our many loyal customers.

Today, Deublin is the world's largest manufacturer of Rotary Unions, with state-of-the-art factories, technical sales and services, and local stocking in 13 countries on four continents, as well as a worldwide distribution network operating in more than 60 countries. Our global organization and extensive catalog of field-tested products ensure a precise match between each customer's requirements and an engineered solution. Deublin has been part of the HOERBIGER Group since 2019 and forms the core of the Rotary Solution division.

We cordially invite you to visit our modern manufacturing facilities in Waukegan, Illinois, USA; Mainz, Germany; Monteveglio, Italy; Dalian, China; and Diadema, Brazil.

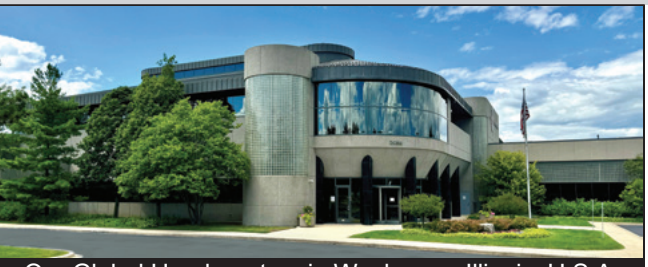

Our Global Headquarters in Waukegan, Illinois, U.S.A.



Mainz, Germany



Bologna, Italy



Dalian, China

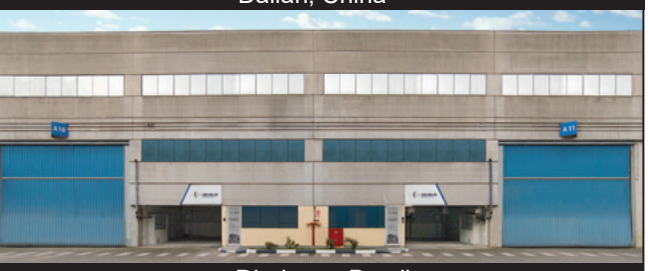

Diadema, Brazil

AMERICA

DEUBLIN USA
2050 Norman Drive
Waukegan, IL 60085-6747 U.S.A.
Phone: +1 847 689 8600
Fax: +1 847 689 8690
E-mail: Info-US@deublin.com

DEUBLIN Brazil
Juntas Rotativas de Precisão Ltda.
Av. Fagundes de Oliveira, 538 - A11 - Piraporinha
CEP: 09950-300 - Diadema - SP - Brasil
Tel: +55 11-2455 3245
Fax: +55 11-2455 2358
E-mail: info-BR@deublin.com

ASIA

DEUBLIN China
No. 2, 6th DD Street,
DD Port, Dalian, 116620, China
Phone: +86 411-8754 9678
Fax: +86 411-8754 9679
E-mail: Info-CN@deublin.com

Room 15A07, Wangjiao Plaza
No. 175 East Yan'an Road, Huangpu District
Shanghai 200002
Phone: +86 21-5298 0791
Fax: +86 21-5298 0790
E-Mail: Info-CN@deublin.com

DEUBLIN Asia Pacific
7 Temasek Boulevard #21-05,
Suntec Tower One, Singapore 038987
Phone: +65 6259-9225
Fax: +65 6259-9723
E-mail: deublin@singnet.com.sg

DEUBLIN Japan
2-13-1, Minamihanayashiki, Kawanishi City
Hyogo 666-0026, Japan
Phone: +81 72-757 0099
Fax: +81 72-757 0120
E-mail: Info-JP@deublin.com

2-4-10-3F, Ryogoku, Sumida-ku,
Tokyo 130-0026, Japan
Phone: +81 35-625 0777
Fax: +81 35-625 0888
E-mail: Info-JP@deublin.com

4-1-13-201 Sakae,
Ichinomiya, Aichi 491-0858, Japan
Phone: +81 586-73 0222
Fax: +81 586-73 0223
E-mail: Info-JP@deublin.com

DEUBLIN Korea
Star Tower #1003, Sangdaewon-dong 223-25,
Jungwon-gu, Seongnam-si, Gyeonggi-do,
South Korea
Phone: +82-31-8018 5777
Fax: +82-31-8018 5780
e-mail: Info-KR@deublin.com

EUROPE

DEUBLIN Germany
Florenz - Allee 1
55129 Mainz, Germany
Phone: +49 6131-49980
E-mail: Info-DE@deublin.com

DEUBLIN Italy
Via Guido Rossa, 9 - Loc. Monteveglio 40053
Comune di Valsamoggia (BO), Italy
Phone: +39 051-835611
Fax: +39 051-832091
E-mail: Info-IT@deublin.com

DEUBLIN Austria
Lainzer Straße 35
1130 Wien, Austria
Phone: +43 1-8768450
Fax: +43 1-876845030
E-mail: Info-AT@deublin.com

DEUBLIN France
61 Bis, Avenue de l'Europe
Z.A.C de la Malnoue
77184 Emerainville, France
Phone: +33 1-64616161
Fax: +33 1-64616364
E-mail: Info-FR@deublin.com

DEUBLIN Poland
ul. Bierutowska 57-59
51-317 Wrocław, Poland
Phone: +48 71-3528152
Fax: +48 71-3207306
E-mail: Info-PL@deublin.com

DEUBLIN Spain
CLola Anglada, 20
08228 Les Fonts (Terrassa), Spain
Phone: +34 93-221 1223
E-mail: Info-ES@deublin.com

DEUBLIN United Kingdom
6 Sopwith Park, Royce Close, West Portway
Andover SP10 3TS, UK
Phone: +44 1264-33 3355
Fax: +44 1264-33 3304
E-mail: Info-UK@deublin.com

www.deublin.com

SERVICE AND STOCK ARE AVAILABLE THROUGHOUT THE WORLD

DEUBLIN
A HOERBIGER COMPANY

COR 251 US | ©2025 DEUBLIN Company